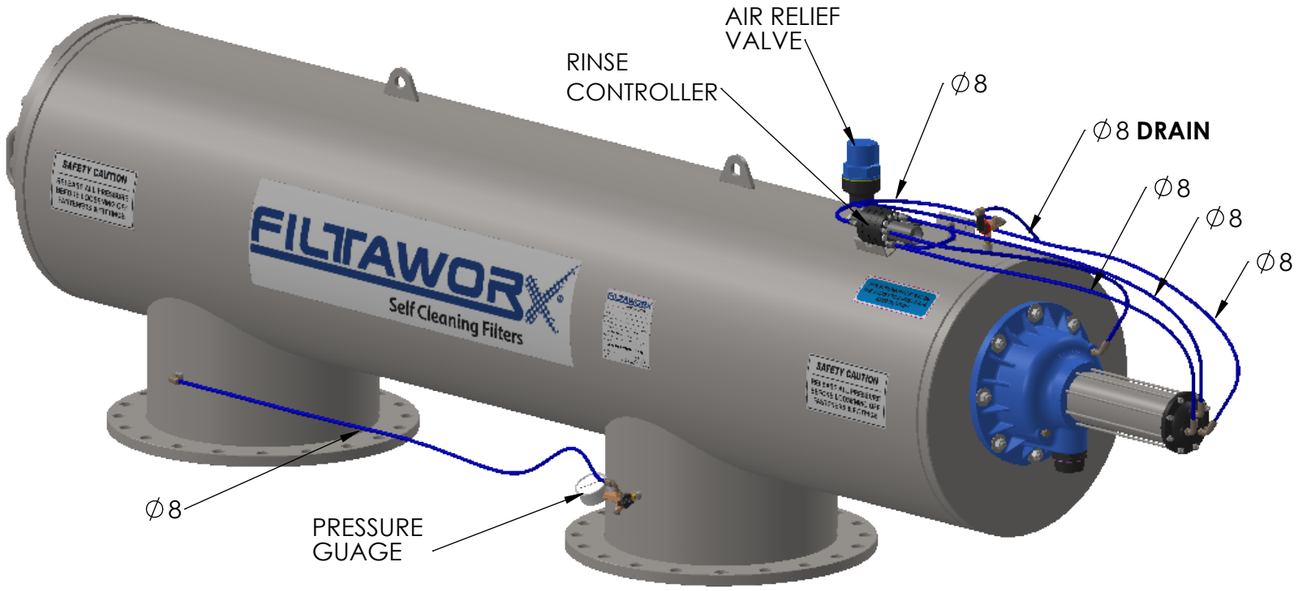

TECHNICAL DATA:

Norminal Flow Rate: 6164 GPM / 1400 cubic m/hr at 2m Head Loss

Filter Area: 2472.25 sq in / 15950 sq cm
Screen Size Available: 50, 80, 100, 120, 150, 200, 400, 800 micron

Max. Working Pressure: 150psi / 10 bar
Min. Upstream Line Pressure Required During Rinse Cycle: 30 psi /2 bar

Max. Working Temperature: 150°F / 65°C

Approximate Rinse Cycle Time: 15 - 17 Sec.

Inlet & Outlet Connection: DN450 Table E / ISO PN10 / ANSI CL150

Flush Drain Outlet Connection: 2" BSPT Male
Main Drain Header: DN50 2" Norminal Bore

Approximate Weight: Empty ---------- 926 lbs / 428 kg
Full of Water --- 1764 lbs / 800 kg

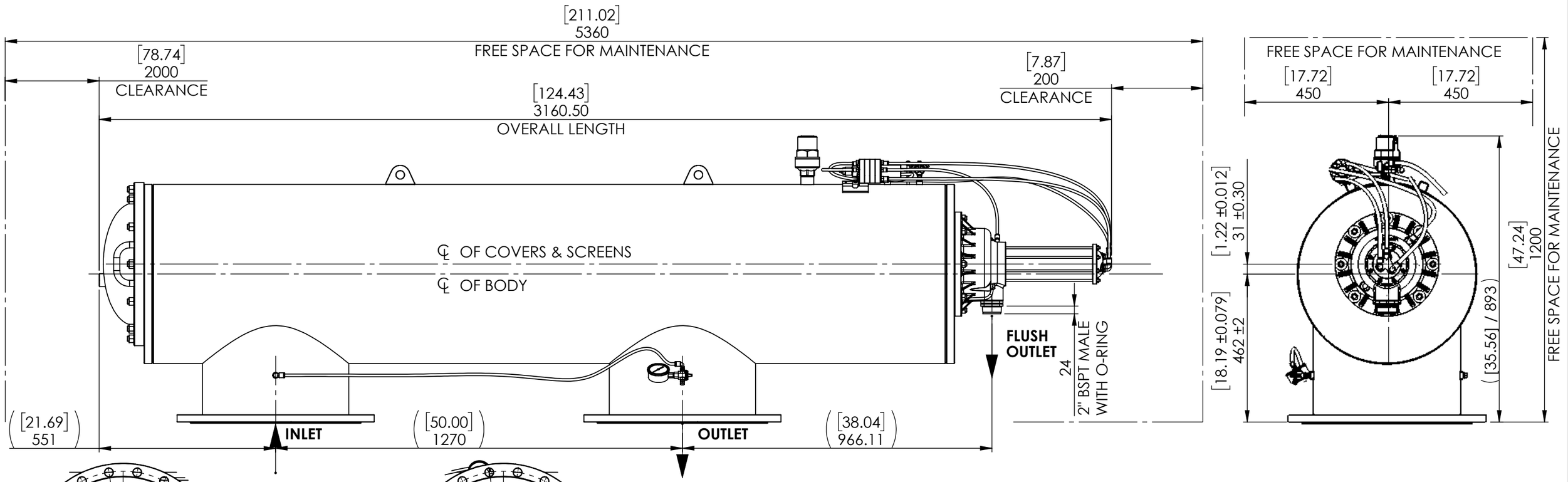

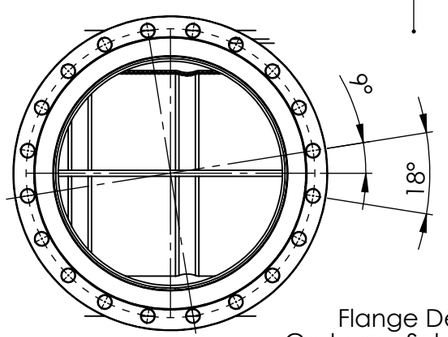

INLET

Flange Details Depend
Customer Selected Flange Type

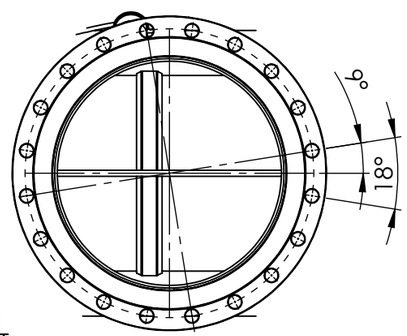

OUTLET

PROPRIETARY AND CONFIDENTIAL
THE INFORMATION CONTAINED IN THIS DRAWING IS THE SOLE PROPERTY OF FILTAWORX PTY. LTD. ANY REPRODUCTION IN PART OR AS A WHOLE WITHOUT THE WRITTEN PERMISSION OF FILTAWORX PTY. LTD. IS PROHIBITED.

DIMENSIONS ARE IN [inches]/mm

MATERIAL
STAINLESS STEEL BODY
GLASS REINFORCED NYLON LID

FINISH

TOL. MACHINING	±0.25
TOL. ANGULAR	±0.25°

FILTAWORX

TITLE
FW450 WATER FILTER
AUTOMATIC SELF CLEANING
DN450 TABLE E / ISO PN10 / ANSI CL150

SIZE	DWG. NO.	REV.
A3	GA-05511-H	0

SCALE: 1:12. WEIGHT: SEE TECHNICAL DATA SHEET: 1 OF 1